Improved Coolant Thru Shell Mill Applications

FX series holders are designed for coolant thru shell mill holders who route coolant thru the center of the holder body. FX provides coolant into the pilot area for efficient routing to the inserts in the cut.
FX holder are manufactured with DIN AD/B coolant ports for machines that require coolant thru the flange.

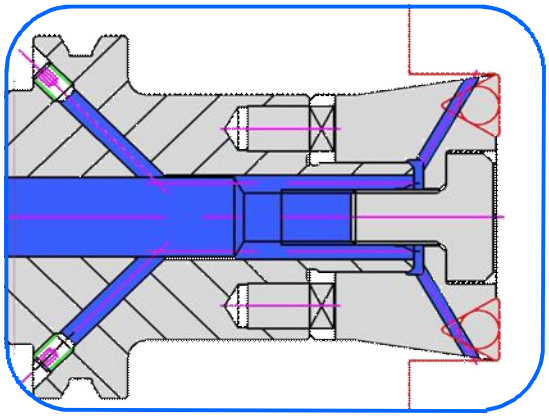

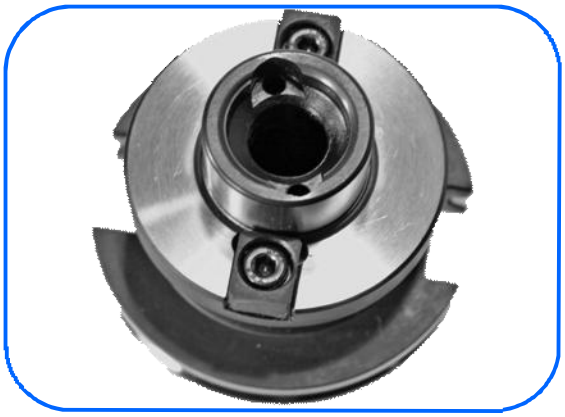

P: 847.593.6000 - F: 847.593.6005 - www.gohpi.com

FX

Coolant Shell Mill Adapter

FX Coolant Thru Shell Mill Holders

Coolant thru designed to feed coolant thru shell mill adapters with coolant port option in the mounting pilot relief.
Coolant Thru the Center and DIN flange entry Coolant (AD/B) standard.

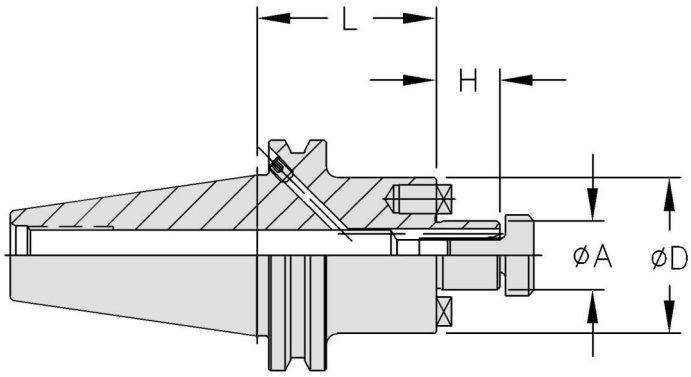

Shank	Part Number	A	D	L	H	DRIVE KEY	SCREW THREAD
CAT40	CAT40-FX19.05-45	0.750	1.75	1.77	0.69	0.312	3/8-24
	CAT40-FX19.05-90 *		1.75	3.54			
	CAT40-FX25.4-45	1.000	1.97	1.77	0.69	0.375	1/2-20
	CAT40-FX25.4-90 *		1.97	3.54			
	CAT40-FX31.75-45	1.250	2.87	1.77	0.69	0.500	5/8-11
	CAT40-FX38.1-45 *	1.500	3.82	1.77	0.94	0.625	3/4-16
CAT50	CAT50-FX19.05-45	0.750	1.75	1.77	0.69	0.312	3/8-24
	CAT50-FX19.05-90 *		1.75	3.54			
	CAT50-FX19.05-150 *		1.75	5.91			
	CAT50-FX25.4-45	1.000	1.97	1.77	0.69	0.375	1/2-20
	CAT50-FX25.4-90 *		1.97	3.54			
	CAT50-FX25.4-150 *		1.97	5.91			
	CAT50-FX31.75-45	1.250	2.87	1.77	0.69	0.500	5/8-11
	CAT50-HSFX31.75-90 *		2.87	3.54			
	CAT50-FX38.1-45	1.500	3.82	1.77	0.94	0.625	3/4-16
	CAT50-FX38.1-90 *		3.82	3.54			
	CAT50-FX50.8-50	2.000	4.37	1.97	0.94	0.750	1-14
BT30	BT30-FX19.05-30 *	0.750	1.75	1.18	0.69	0.312	3/8-24
	BT30-FX25.4-45 *	1.000	1.97	1.77	0.69	0.375	1/2-20
BT40	BT40-FX19.05-45 *	0.750	1.75	1.77	0.69	0.312	3/8-24
	BT40-FX25.4-45 *	1.000	1.97	1.77	0.69	0.375	1/2-20
	BT40-FX31.75-45 *	1.250	2.87	1.77	0.69	0.500	5/8-11
	BT40-FX38.1-45 *	1.500	3.82	1.77	0.94	0.625	3/4-16

Note:
Items with * mark are non-regular stock items. Please contact HPI or your local distributors for availability.