P: 847.593.6000 - F: 847.593.6005 - www.gohpi.com

EM

End Mill Adapter

Features

- Coolant Thru
- DIN-B Coolant upon request, standard for newest inventory
- Specials Available Upon request

Fig. 1

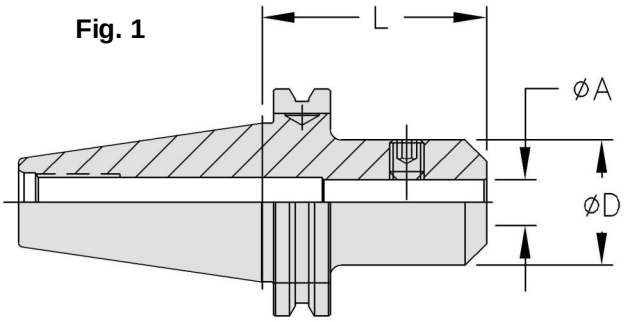

Shank	Order No.	A	L	D	Fig.
CAT40	CAT40-EM 1/8 - 65	.125	2.56	0.71	1
	CAT40-EM 1/8 -100	.125	3.94	0.71	1
	CAT40-EM 3/16 - 65	.188	2.56	0.79	1
	CAT40-EM 3/16 -120 *	.188	4.72	0.79	1
	CAT40-EM 3/16 -150	.188	5.91	0.79	1
	CAT40-EM 1/4 - 65	.250	2.56	0.81	1
	CAT40-EM 1/4 -120 *	.250	4.72	0.79	1
	CAT40-EM 1/4 -150	.250	5.91	0.79	1
	CAT40-EM 5/16 - 65	.313	2.56	0.87	1
	CAT40-EM 5/16 -120 *	.313	4.72	0.87	1
	CAT40-EM 5/16 -150	.313	5.91	0.87	1
	CAT40-EM 3/8 - 65	.375	2.56	1.00	1
	CAT40-EM 3/8 -120 *	.375	4.72	1.00	1
	CAT40-EM 3/8 -150	.375	5.91	1.00	1
	CAT40-EM 1/2 - 45	.500	1.77	1.38	1
	CAT40-EM 1/2 - 65	.500	2.56	1.38	1
	CAT40-EM 1/2 -100	.500	3.94	1.38	1
	CAT40-EM 1/2 -120 *	.500	4.72	1.38	1
	CAT40-EM 1/2 -150	.500	5.91	1.38	1
	CAT40-EM 5/8 - 45	.625	1.77	1.65	1
	CAT40-EM 5/8 - 65	.625	2.56	1.65	1
	CAT40-EM 5/8 - 95 *	.625	3.74	1.65	1
	CAT40-EM 5/8 -120 *	.625	4.72	1.65	1
	CAT40-EM 5/8 -150	.625	5.91	1.65	1
	CAT40-EM 3/4 - 45	.750	1.77	1.75	1
	CAT40-EM 3/4 - 65	.750	2.56	1.75	1
	CAT40-EM 3/4 - 95 *	.750	3.74	1.75	1
	CAT40-EM 3/4 -100	.750	3.94	1.75	1
	CAT40-EM 3/4 -120 *	.750	4.72	1.75	1
	CAT40-EM 3/4 -150	.750	5.91	1.75	1
	CAT40-EM 7/8 - 85	.875	3.35	2.28	2
	CAT40-EM 1 - 45	1.00	1.77	2.36	2
	CAT40-EM 1 - 75	1.00	2.95	2.36	2
	CAT40-EM 1 -100	1.00	3.94	2.36	2
	CAT40-EM 1 -120 *	1.00	4.72	2.36	2
	CAT40-EM 1 -150	1.00	5.91	2.36	2
	CAT40-EM 1.1/4 - 50	1.25	1.97	2.48	2
	CAT40-EM 1.1/4 -100	1.25	3.94	2.48	2
	CAT40-EM 1.1/4 -150	1.25	5.91	2.48	2
	CAT40-EM 1.1/2 -105	1.50	4.13	2.48	2
	CAT40-EM 1.1/2 -150	1.50	5.91	2.48	2

Fig. 2

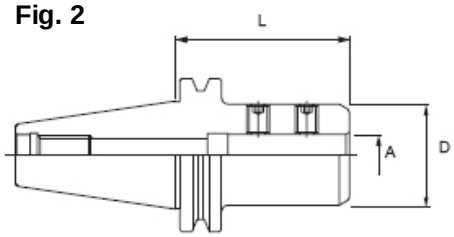

EM

End Mill Adapter

Features

- Coolant Thru
- DIN-B Coolant upon request
- Specials Available Upon request

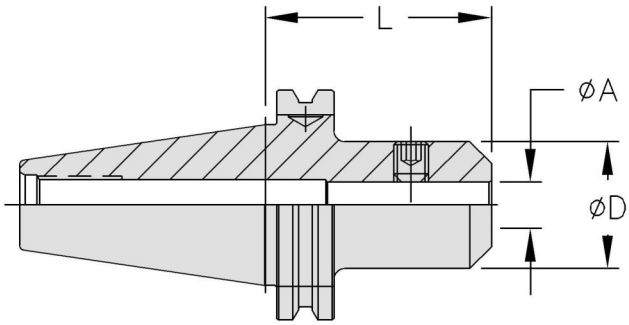

Shank	Order No.	A	L	D	Fig.
CAT50	CAT50-EM 3/16 -135	.188	5.31	0.79	1
	CAT50-EM 1/4 - 65	.250	2.56	0.79	1
	CAT50-EM 1/4 -135	.250	5.31	0.79	1
	CAT50-EM 5/16 -135	.313	5.31	0.87	1
	CAT50-EM 3/8 - 75	.375	2.95	1.00	1
	CAT50-EM 3/8 -100	.375	3.94	1.00	1
	CAT50-EM 3/8 -150	.375	5.91	1.00	1
	CAT50-EM 3/8 -200 *	.375	7.87	1.00	1
	CAT50-EM 1/2 - 75	.500	2.95	1.38	1
	CAT50-EM 1/2 -100	.500	3.94	1.38	1
	CAT50-EM 1/2 -150	.500	5.91	1.38	1
	CAT50-EM 1/2 -200 *	.500	7.87	1.38	1
	CAT50-EM 5/8 - 75	.625	2.95	1.65	1
	CAT50-EM 5/8 -100	.625	3.94	1.65	1
	CAT50-EM 5/8 -150	.625	5.91	1.65	1
	CAT50-EM 5/8 -200 *	.625	7.87	1.65	1
	CAT50-EM 3/4 - 75	.750	2.95	1.89	1
	CAT50-EM 3/4 -100	.750	3.94	1.89	1
	CAT50-EM 3/4 -150	.750	5.91	1.89	1
	CAT50-EM 3/4 -200 *	.750	7.87	1.89	1
	CAT50-EM 7/8 - 90	.875	3.54	2.28	2
	CAT50-EM 7/8 -150	.875	5.91	2.28	2
	CAT50-EM 1 -100	1.00	3.94	2.36	2
	CAT50-EM 1 -150	1.00	5.91	2.36	2
	CAT50-EM 1 -200	1.00	7.87	2.36	2
	CAT50-EM 1.1/4 -100	1.25	4.13	2.48	2
	CAT50-EM 1.1/4 -150	1.25	5.91	2.48	2
	CAT50-EM 1.1/4 -200	1.25	7.87	2.48	2
	CAT50-EM 1.1/2 -105	1.50	4.13	2.75	2
	CAT50-EM 1.1/2 -150	1.50	5.91	2.75	2
	CAT50-EM 2 -135	2.00	5.31	3.94	2

Fig. 2

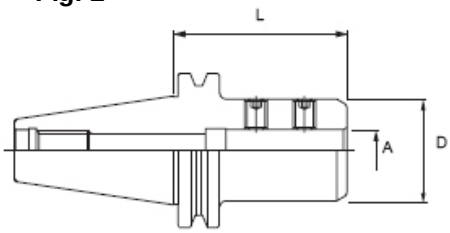

P: 847.593.6000 - F: 847.593.6005 - www.gohpi.com

EM

End Mill Adapter

Features

- Coolant Thru
- DIN-B Coolant upon request

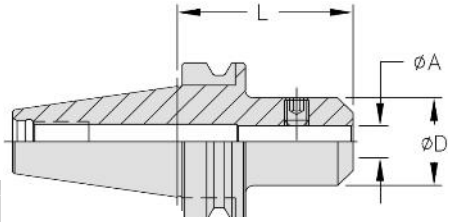

Fig. 2

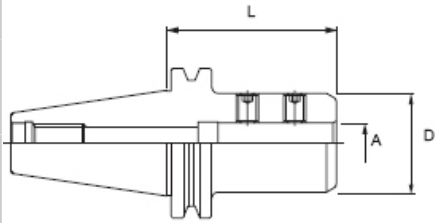

Shank	Order No.	A	L	D	Fig.
BT30	BT30-EM 1/8 - 60	.125	2.36	0.71	1
	BT30-EM 1/8 -105	.125	4.13	0.71	1
	BT30-EM 3/16- 60	.188	2.36	0.79	1
	BT30-EM 3/16-105	.188	4.13	0.79	1
	BT30-EM 1/4 - 60	.250	2.36	0.79	1
	BT30-EM 1/4 -105	.250	4.13	0.79	1
	BT30-EM 5/16- 60	.313	2.36	0.87	1
	BT30-EM 5/16-105	.313	4.13	0.87	1
	BT30-EM 3/8 - 60	.375	2.36	1.00	1
	BT30-EM 3/8 -105	.375	4.13	1.00	1
	BT30-EM 1/2 - 60	.500	2.36	1.38	1
	BT30-EM 1/2 -105	.500	4.13	1.38	1
	BT30-EM 5/8 - 60	.625	2.36	1.65	1
	BT30-EM 5/8 -105	.625	4.13	1.65	1
	BT30-EM 3/4 - 60	.750	2.36	1.89	1
	BT30-EM 3/4 -105	.750	4.13	1.89	1
BT40	BT40-EM 1/8 - 65	.125	2.56	0.71	1
	BT40-EM 1/8 -100	.125	3.94	0.71	1
	BT40-EM 3/16 - 65	.188	2.56	0.79	1
	BT40-EM 3/16 -100	.188	3.94	0.79	1
	BT40-EM 1/4 - 65	.250	2.56	0.79	1
	BT40-EM 1/4 -100	.250	3,94	0.79	1
	BT40-EM 5/16 - 65	.313	2.56	0.87	1
	BT40-EM 5/16 -100	.313	3.94	0.87	1
	BT40-EM 3/8 - 65	.375	2.56	1.00	1
	BT40-EM 3/8 -100	.375	3.94	1.00	1
	BT40-EM 1/2 - 65	.500	2.56	1.38	1
	BT40-EM 1/2 -100	.500	3.94	1.38	1
	BT40-EM 5/8 - 65	.625	2.56	1.65	1
	BT40-EM 5/8 -100	.625	3.94	1.65	1
	BT40-EM 3/4 - 65	.750	2.56	1.89	1
	BT40-EM 3/4 -100	.750	4.72	1.89	1
	BT40-EM 3/4 -150	.750	5.91	1.89	1
	BT40-EM 7/8 - 85	.875	3.35	2.28	2
	BT40-EM 1 - 50	1.00	1.97	2.36	1
	BT40-EM 1 - 75	1.00	2.95	2.36	2
	BT40-EM 1 -100	1.00	3.94	2.36	2
	BT40-EM 1,1/4 - 50	1.25	1.97	2.48	1
	BT40-EM 1.1/4 - 85	1.25	3.35	2.48	2
	BT40-EM 1.1/4 -120	1.25	4.72	2.48	2
BT50	BT50-EM 3/8 - 75	.375	2.95	1.00	1
	BT50-EM 1/2 - 75	.500	2.95	1.50	1
	BT50-EM 3/4 - 75	,750	2.95	1.75	1
	BT50-EM 1 -105	1.00	4.13	2.36	2
	BT50-EM 1.1/4-105	1.25	4.13	2.68	2