VEX-S

Combination Drill with Front & Back Chamfering of Through Holes

- High performance solid carbide drill tip combined with patented SNAP chamfering system
- New VEX drill geometry for better chip control
- Quick and easy drill tip and chamfer blade replacement
- No presetting between drill changes

The VEX-S Tool combines a new high performance solid carbide drill with Heule's patented SNAP chamfering system to drill and chamfer through holes in a single operation. Combining common operations increases the user's productivity and efficiency while maintaining quality. The specially developed connecting system ensures a robust and accurate connection with the tool body and facilitates good transmission of power and also allows quick and easy replacement of the VEX-S twist drill. The replaceable VEX drill tip can be reground and recoated for optimum cost effectiveness and is available in sizes 5-12.0 mm.

New VEX Drill Geometry

With the new patented VEX self centering cutting geometry, HEULE is setting new benchmarks in the field of drilling technology. The new VEX cutting geometry guarantees high drilling performance with short chips. Due to the convex cutting edge **(1)** which merges into a concave chip angle **(2)** short chips are guaranteed even when machining a long chipping material. A large chip channel also optimizes swarf evacuation.

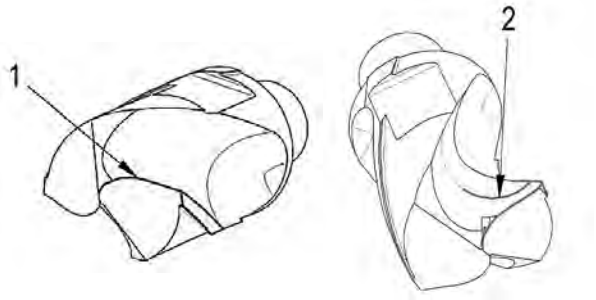

Typical Applications

The VEX-S tool is ideal for drilling smaller diameters and is well suited for the automotive industry and other high production environments. Applications include brake discs, various tube applications, wheel hubs and other components.

Standard and Special Tooling

The VEX-S tool is available from stock in sizes 5-10.5mm in the 1xd tooling; other options are available upon request. VEX-S is also available for special design and build custom tooling to suit many special application needs. Contact Heule Tool Corporation for further information if you need a customized tool.

How to Select a VEX-S Tool

1. Determine the drill hole size.
2. Select the appropriate Drill Tip and the coordinating Tool holder.
3. Choose the SNAP chamfer blade according to the needed chamfer size.

Sample Order: Ø3/8" Drill Hole:

1pc P-S-E2-0953-1H	VEX-S DRILL Ø3/8", Carb-Helica, Series E, 1:1
1pc VEXS-9.5-1d	VEX-S Tool Holder Ø9.5 Series E, 1:1, without inserts
1pc GH-Q-M-30214	SNAP5 Chamfer Blade Ø10.5mm, Carb- TiAlN

1 Series

Bore Range	Series
5.00-5.99	B
6.00-6.99	C
7.00-8.49	D
8.50-10.49	E

2 Bore-depth T

.5xd	1
1xd	2
1.5xd	3
2xd	4

3 Bore Diameter Ød

Indicate the bore diameter here. For example: Ø9.50 = 0950
Standard size as shown.

4 Cutting Material

Carbide K20-K30	1

5 Coating

Uncoated	U
TiN	T
TiAlN	A
DLC	D
Helica	H

Order Number Example: P-S-E 2-0950-1 H

1 = Series
2 = Bore-depth T
3 = Bore-Ød
4 = Cutting Material
5 = Coating

Order Example:

Bore-Ød	= 9.50mm
Carbide Quality	= K30-K4
Coating	= Helica
Bore-depth T	= 9.50mm 1xd
Order Number: P-S-E2-0950-1H	

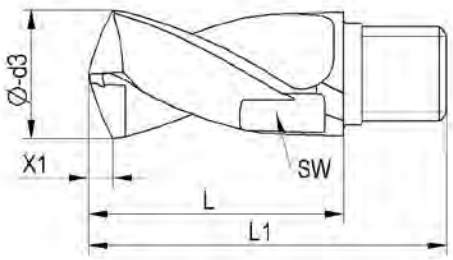

Drill Blade Dimensions

Bore Range	Series		Bore Depth				Bore Depth				Wrench Size	Torque Setting	Flat Wrench
Ød3		X1		T	L	L1		T	L	L1	SW	Ncm	GH-H-S-
5.0-5.49	B	1.00	1xd	5.0	10.2	14.7	2xd				4	170	2301
5.5-5.99		1.10		5.5	11.1	15.6					4	170	2301
6.0-6.49	C	1.20		6.0	11.7	16.2		12	17.4	21.9	5	250	2301
6.5-6.99		1.30		6.5	12.7	17.2		13	18.4	22.9	5	250	2301
7.0-7.49	D	1.35		7.0	13.6	19.1		14	20.0	24.5	6	400	2302
7.5-7.99		1.45		7.5	14.4	19.9		15	21.4	26.9	6	400	2302
8.0-8.49		1.55		8.0	15.2	20.7		16	22.7	28.2	7	400	2302
8.5-8.99	E	1.65		8.5	16.1	21.6		17	24.0	29.5	7	600	2302
9.0-9.49		1.75		9.0	16.9	22.4		18	25.4	30.9	8	600	2303
9.5-9.99		1.85		9.5	17.8	23.3		19	26.7	32.2	8	600	2303
10.0-10.49		1.90		10.0	18.6	24.1		20	28.1	33.6	9	600	2303

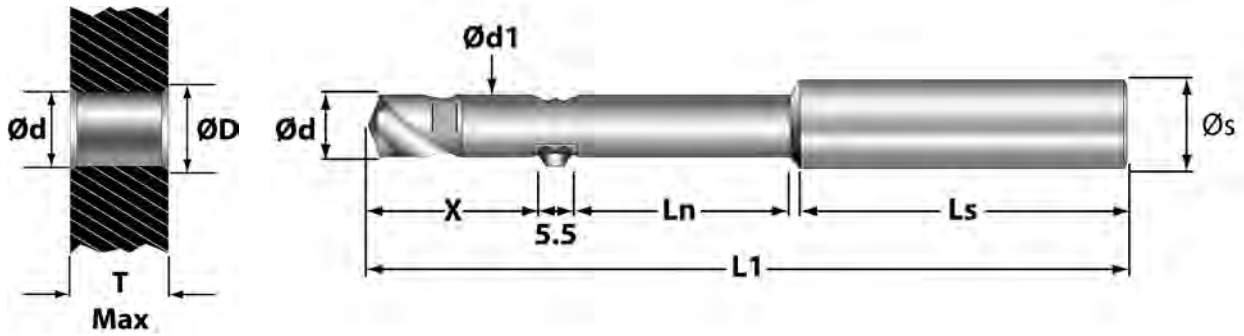

VEX-S 1xd Tools

Series	Drill Tip*	Ød Drill mm	inches	Tool Holder	T	Ød1	X	L1	Ln	Ls	Øs	Recommended Chamfer** Blade** Carbide, TiAlN (fab)	ØD
B	P-S-B2-0500-1H	5.0mm	(.197)	GH-Q-O-4000	5.0	4.9	18.9	70.5	7.5	36	8	GH-Q-M-30205	6.0
	P-S-B2-0510-1H	5.1mm	(.201)	GH-Q-O-4000								GH-Q-M-30205	6.0
	P-S-B2-0550-1H	5.5mm	(.217)	GH-Q-O-4001	5.5	5.4	19.8	71.6	8.0			GH-Q-M-30206	6.5
C	P-S-C2-0600-1H	6.0mm	(.236)	GH-Q-O-4052	6.0	5.9	20.6	77.7	15	40	10	GH-Q-M-30207	7.0
	P-S-C2-0635-1H	6.35mm	(1/4”)	GH-Q-O-4052								GH-Q-M-30208	7.5
	P-S-C2-0650-1H	6.5mm	(.256)	GH-Q-O-4053	6.5	6.4	21.6	78.9	16			GH-Q-M-30208	7.5
	P-S-C2-0680-1H	6.8mm	(.268)	GH-Q-O-4053								GH-Q-M-30209	8.0
D	P-S-D2-0700-1H	7.0mm	(.276)	GH-Q-O-4054	7.0	6.9	23.8	81.4	17	40	10	GH-Q-M-30209	8.0
	P-S-D2-0714-1H	7.14mm	(9/32”)	GH-Q-O-4054								GH-Q-M-30209	8.0
	P-S-D2-0750-1H	7.5mm	(.295)	GH-Q-O-4055	7.5	7.4	24.6	82.4	18			GH-Q-M-30210	8.5
	P-S-D2-0794-1H	7.94mm	(5/16”)	GH-Q-O-4055								GH-Q-M-30211	9.0
	P-S-D2-0800-1H	8.0mm	(.315)	GH-Q-O-4056	8.0	7.9	25.4	89.5	19	45	12	GH-Q-M-30211	9.0
	P-S-D2-0840-1H	8.4mm	(.331)	GH-Q-O-4056								GH-Q-M-30212	9.5
E	P-S-E2-0850-1H	8.5mm	(.335)	GH-Q-O-4057	8.5	8.4	26.6	90.9	20	45	12	GH-Q-M-30212	9.5
	P-S-E2-0873-1H	8.73mm	(11/32”)	GH-Q-O-4057								GH-Q-M-30213	10.0
	P-S-E2-0900-1H	9.0mm	(.354)	GH-Q-O-4058	9.0	8.9	27.4	91.9	21			GH-Q-M-30213	10.0
	P-S-E2-0935-1H	9.35mm	(.368)	GH-Q-O-4058								GH-Q-M-30213	10.0
	P-S-E2-0950-1H	9.5mm	(.374)	GH-Q-O-4059	9.5	9.4	28.3	93.1	22			GH-Q-M-30214	10.5
	P-S-E2-0953-1H	9.53mm	(3/8”)	GH-Q-O-4059								GH-Q-M-30214	10.5
	P-S-E2-1000-1H	10.0mm	(.394)	GH-Q-O-4060	10.0	9.9	29.5	95.1	23	45	14	GH-Q-M-30215	11.0

*Other drill sizes available on request. Example: Ød = 8.33mm (.328”) - P-S-D2-0833-1H

** Chamfer blades are interchangeable; maximum chamfer diameter ØD = hole Ød + 2mm

PROGRAMMING PG. 88-89
SPARE PARTS PG. 90

Drill/Chamfer Tools –
For holes **6 - 10mm** .236 - .394”

Catalog No. HTC012

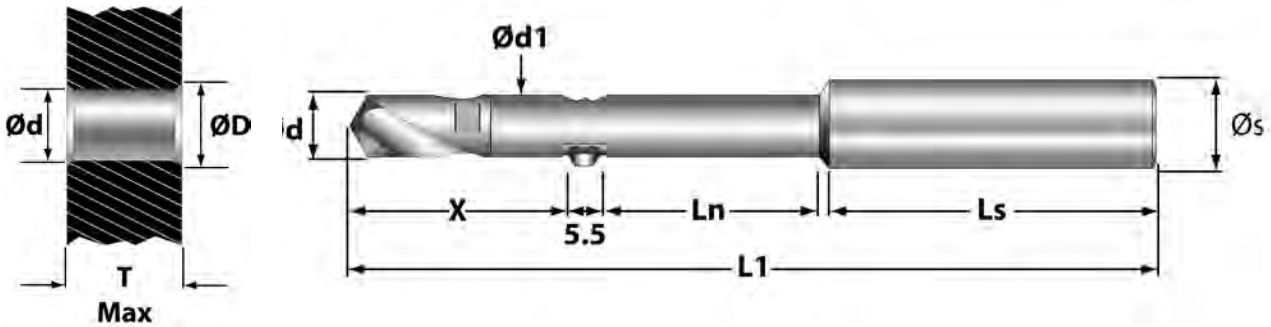

VEX-S 2xd Tools

Series	Drill Tip*	Ød Drill mm	inches	Tool Holder	T	Ød1	X	L1	Ln	Ls	Øs	Recommended Chamfer** Blade** Carbide, TiAlN (fab)	ØD
C	P-S-C4-0600-1A	6.0mm	(.236)	GH-Q-O-4052	12	5.9	27.3	90.8	15	40	10	GH-Q-M-30207	7.0
	P-S-C4-0635-1A	6.35mm	(1/4”)	GH-Q-O-4052								GH-Q-M-30208	7.5
	P-S-C4-0650-1A	6.5mm	(.256)	GH-Q-O-4053	13	6.4	28.9	93.3	16			GH-Q-M-30208	7.5
	P-S-C4-0680-1A	6.8mm	(.268)	GH-Q-O-4053								GH-Q-M-30209	8.0
D	P-S-D4-0700-1A	7.0mm	(.276)	GH-Q-O-4054	14	6.9	31.6	96.7	17	40	10	GH-Q-M-30209	8.0
	P-S-D4-0714-1A	7.14mm	(9/32”)	GH-Q-O-4054								GH-Q-M-30209	8.0
	P-S-D4-0750-1A	7.5mm	(.295)	GH-Q-O-4055	15	7.4	32.9	98.7	18			GH-Q-M-30210	8.5
	P-S-D4-0794-1A	7.94mm	(5/16”)	GH-Q-O-4055								GH-Q-M-30210	9.0
	P-S-D4-0800-1A	8.0mm	(.315)	GH-Q-O-4056	16	7.9	37.2	106.8	19	45	12	GH-Q-M-30211	9.0
	P-S-D4-0840-1A	8.4mm	(.331)	GH-Q-O-4056								GH-Q-M-30212	9.5
E	P-S-E4-0850-1A	8.5mm	(.355)	GH-Q-O-4057	17	8.4	35.9	109.1	20	45	12	GH-Q-M-30212	9.5
	P-S-E4-0873-1A	8.73mm	(11/32”)	GH-Q-O-4057								GH-Q-M-30213	10.0
	P-S-E4-0900-1A	9.0mm	(.354)	GH-Q-O-4058	18	8.9	37.2	111.2	21			GH-Q-M-30213	10.0
	P-S-E4-0935-1A	9.35mm	(.368)	GH-Q-O-4058								GH-Q-M-30213	10.0
	P-S-E4-0950-1A	9.5mm	(.374)	GH-Q-O-4059	19	9.4	38.6	113.3	22			GH-Q-M-30214	10.5
	P-S-E4-0953-1A	9.53mm	(3/8”)	GH-Q-O-4059								GH-Q-M-30214	10.5
	P-S-E4-1000-1A	10.0mm	(.394)	GH-Q-O-4060	20	9.9	39.9	116.4	23	45	14	GH-Q-M-30215	11.0

*Non-stock standard item with extended delivery time

*Other drill sizes available on request. Example: Ød = 8.33mm (.328”) - P-S-D4-0833-1H

** Chamfer blades are interchangeable; maximum chamfer diameter ØD = hole Ød + 2mm

PROGRAMMING PG. 88-89
SPARE PARTS PG. 90

VEX-S Speeds and Feeds

IMPORTANT: Tool holder must be modified with blade locking mechanism for spindle speeds above 6,000 rpm. Please contact Heule Tool Corporation Engineering Department.

Material	SFM	IPR		
		Ø5-6.5	Ø6.5-8	Ø8-10.5
Unalloyed steel	300-400	.003-.005	.004-.008	.006-.010
Cast steel Free machining steel	150-250	.003-.005	.004-.008	.006-.010
Low-alloy steel	250-400	.003-.005	.004-.008	.006-.010
Cast steel	220-350	.003-.005	.004-.008	.006-.010
High-alloy steel	130-220	.002-.004	.003-.006	.004-.008
Stainless steel	100-160	.001-.002	.002-.003	.003-.004
Grey cast iron	275-500	.004-.007	.006-.010	.008-.013
Nodular cast iron	275-450	.003-.006	.004-.009	.006-.012
Aluminium-forging alloys	380-600	.005-.007	.007-.010	.010-.013
Aluminium-casting alloys	300-600	.005-.007	.007-.010	.010-.013
Brass	300-500	.005-.007	.007-.010	.010-.013
Bronze-short chipping	200-300	.004-.006	.006-.009	.008-.012
Bronze-long chipping	130-200	.003-.005	.004-.008	.006-.010

VEX-S Programming Sequence

It is not necessary to change the direction of rotation or stop the spindle

AV: Working feed, forward
AR: Working feed, backward
EV: Rapid feed, forward
ER: Rapid feed, backward

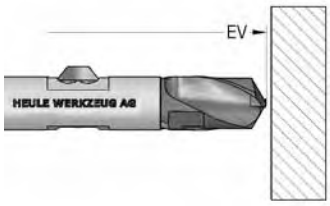	**Step 1:** Rapid Feed the tool to within clearance of the workpiece.
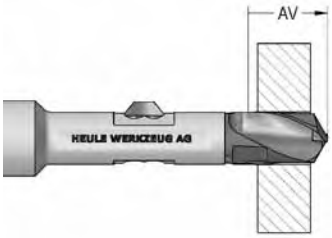	**Step 2:** With forward Working Feed (WF), feed the tool through the workpiece until the hole is drilled and the drill tip is clear of the bore.
	Step 3: Rapid feed the tool so the SNAP blade is within clearance of the workpiece top surface or burr.
	Step 4: With working feed, cut the top chamfer.Continue feeding until the SNAP blade is completely retracted into the tool body.
	Step 5: Use rapid feed to position the SNAP blade on the far side of the part. Position the tool so the SNAP blade is completely extended and clear of the part or burr.
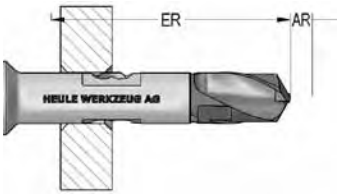	**Step 6:** With back working feed, cut the back chamfer. When the SNAP blade is completely within the tool and clear of the back surface, the tool can be extracted with rapid feed.

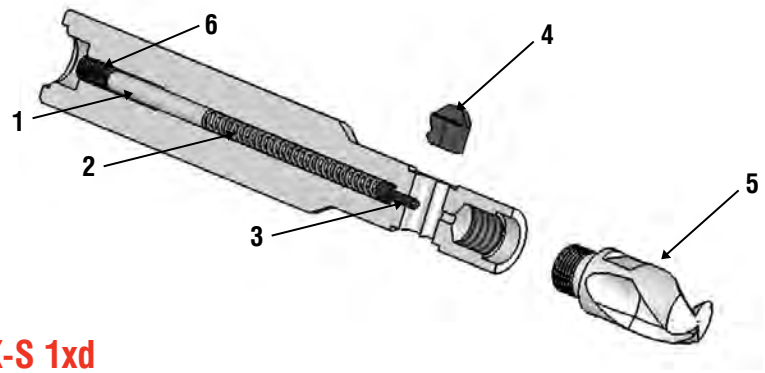

Spare Parts – VEX-S 1xd

Tool Holder	1	2	3	4	5	6
GH-Q-0-	Distance Pin	Spring	Control Bolt	Blade	Drill Tip	Screw Set
4000 4001	GH-Q-E-0052	GH-H-F-0019	GH-Q-E-0008	See Below	See Pages 86-87	GH-H-S-0127

Spare Parts – VEX-S 2xd

Tool Holder	1	2	3	4	5	6
GH-Q-0-	Distance Pin	Spring	Control Bolt	Blade	Drill Tip	Screw Set
4052 4053 4054 4055	GH-Q-E-0048	GH-H-F-0019	GH-Q-E-0008	See Below	See Pages 86-87	GH-H-S-0127
4056 4057 4058 4059	GH-Q-E-0039	GH-H-F-0019	GH-Q-E-0008	See Below	See Pages 86-87	GH-H-S-0127
4060	GH-Q-E-0039	GH-H-F-0019	GH-Q-E-0008	See Below	See Pages 86-87	GH-H-S-0127

Bore Range	Tool Holder	SNAP 5 Blade, Carbide TiAlN 90°, front and back cutting Order Number and *(Chamfer ØD mm)*		
5.0-5.49	GH-Q-0-4000	GH-Q-M-30205 *(6.0)*	GH-Q-M-30206 *(6.5)*	GH-Q-M-30207 *(7.0)*
5.5-5.99	GH-Q-0-4001	GH-Q-M-30206 *(6.5)*	GH-Q-M-30207 *(7.0)*	GH-Q-M-30208 *(7.5)*
6.0-6.49	GH-Q-0-4052	GH-Q-M-30207 *(7.0)*	GH-Q-M-30208 *(7.5)*	GH-Q-M-30209 *(8.0)*
6.5-6.99	GH-Q-0-4053	GH-Q-M-30208 *(7.5)*	GH-Q-M-30209 *(8.0)*	GH-Q-M-30210 *(8.5)*
7.0-7.49	GH-Q-0-4054	GH-Q-M-30209 *(8.0)*	GH-Q-M-30210 *(8.5)*	GH-Q-M-30211 *(9.0)*
7.5-7.99	GH-Q-0-4055	GH-Q-M-30210 *(8.5)*	GH-Q-M-30211 *(9.0)*	GH-Q-M-30212 *(9.5)*
8.0-8.49	GH-Q-0-4056	GH-Q-M-30211 *(9.0)*	GH-Q-M-30212 *(9.5)*	GH-Q-M-30213 *(10.0)*
8.5-8.99	GH-Q-0-4057	GH-Q-M-30212 *(9.5)*	GH-Q-M-30213 *(10.0)*	GH-Q-M-30214 *(10.5)*
9.0-9.49	GH-Q-0-4058	GH-Q-M-30213 *(10.0)*	GH-Q-M-30214 *(10.5)*	GH-Q-M-30215 *(11.0)*
9.5-9.99	GH-Q-0-4059	GH-Q-M-30214 *(10.5)*	GH-Q-M-30215 *(11.0)*	GH-Q-M-30216 *(11.5)*
10.0-10.49	GH-Q-0-4060	GH-Q-M-30215 *(11.0)*	GH-Q-M-30216 *(11.5)*	GH-Q-M-30217 *(12.0)*

Note: For blade dimensions, see page 61. For wrench and drill tip dimensions, see page 85.

How to Change the VEX Drill Tip

Assembly:

Step 1:
Clean the surfaces between the VEX-S twist drill and the tool body.

1

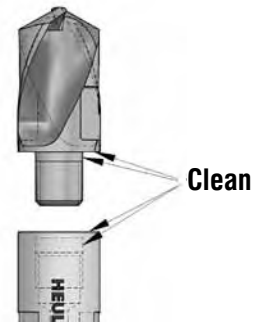

Step 2:
Screw the VEX-S drill insert tightly with a flat wrench to the tool body.

2

Step 3:
Check to make sure there is a seamless connection between the drill insert and tool body after tightening the drill insert. There should not be any gaps.

NOTE: There are a few situations that could cause gaps;

- Dirt between drill and tool body.
  To fix: remove the VEX-S twist drill and clean.
- VEX-S twist drill is not tight enough.
  To fix: tighten the VEX-S twist drill.
- Adaption areas are damaged.
  To fix: exchange the VEX-S twist drill and/or VEX-S tool body.

3

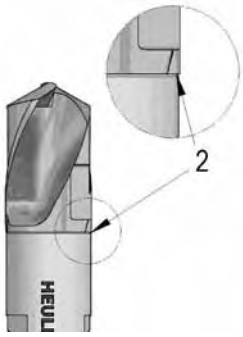

Disassembly:

Step 1:
Unscrew the VEX-S twist drill with a flat wrench in counter-clockwise direction from the tool body and remove the twist drill.

1

Wrenches:
Be sure to use the wrenches available from HEULE to assemble the VEX-S tools. This chart explains which wrench goes with which series.

Wrenches	Description	Distance Across Flats
GH-H-S-2301	Wrench; Series B&C, 5.0-6.49	4 or 5mm
GH-H-S-2302	Wrench; Series C,D&E 6.5-8.99	6 or 7mm
GH-H-S-2303	Wrench; Series E, 9.0-10.0	8 or 9mm

Troubleshooting

Problem	Explanation	Solution
Built-up material on cutting edge	• Cutting Speed is too slow • Feed Rate is too slow • Coating is incorrect for this material • Insufficient coolant flow	• Increase cutting Speed • Increase Feed Rate • Change Drill Tip Coating • Adjust coolant flow or position
Chips Jamming in the Chip Gullet	• Feed rate is too high for chip evacuation • Drill tip is too short for material thickness • Insufficient coolant flow	• Reduce feed rate • Use a Peck Drill cycle • Adjust coolant flow or position • Use longer drill
Burr Formation on the Exit of the Bore (see SNAP troubleshooting on page 56 for burr removal issues)	• Feed and Speed Rate is too high • Drill Tip worn • Insufficient coolant flow	• Reduce cutting speed • Reduce exit feed 50% • Exchange worn drill tip • Adjust coolant flow or position
Hole size is inconsistent or not symmetrical	• Feed is too heavy • Spindle, fixture or set-up is not stable • Insufficient coolant flow	• Reduce feed rate • Check stability of set up • Check rotation • Adjust coolant flow or position
Poor Surface finish Quality	• Drill Tip worn • Incorrect feeds and speeds • Spindle, fixture or set-up is not stable • Insufficient coolant flow	• Exchange worn drill tip • Change feed and speed • Check stability of set up • Adjust coolant flow or position
Chatter during drilling (this must be corrected to avoid tool breakage)	• Incorrect feeds and speeds (normally insignificant feed rate) • Spindle, fixture or set-up is not stable • Insufficient coolant flow	• Reduce cutting speed • Increase feed rate • Check stability of set up • Adjust coolant flow or position
Excessive Cutting Edge Wear	• Incorrect feeds and speeds (normally lacking cutting speed) • Spindle, fixture or set-up is not stable • Insufficient coolant flow	• Increase cutting speed • Decrease feed rate • Check stability of set up • Adjust coolant flow or position
Chipping of Cutting Edge	• Material building up on Cutting edge (chipping off) • Incorrect feeds and speeds (normally lacking cutting speed) • Spindle, fixture or set-up is not stable • Entering / Exiting on incline, or irregular surface • Insufficient coolant flow	• Increase cutting speed • Reduce feed rate. • Enter / Exit irregularities at 50% of feed rate • Check stability of set up • Adjust coolant flow or position
Excessive Margin Wear (Corner wear or discoloration on Margins O.D.)	• Incorrect feeds and speeds (normally excessive cutting speed) • Tool is running out of round • Insufficient coolant flow	• Reduce cutting speed • Check run out • Check stability of set up • Adjust coolant flow or position
Chipping of the Top of the Drill-bit	• Drill is deflecting during drilling	• Reduce feed rate • Check stability of set up

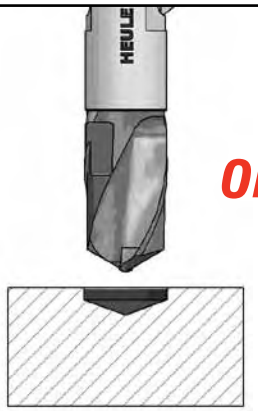	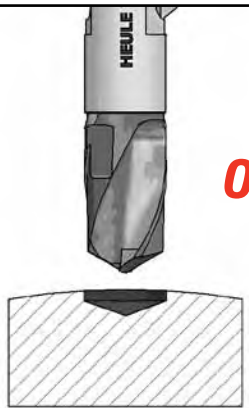	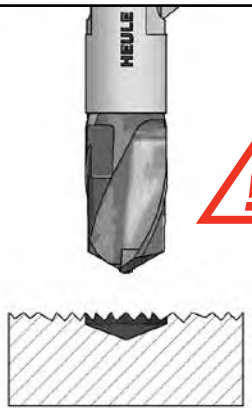
Drilling of even machined surfaces.	Drilling on central or convex surfaces.	Drilling on uneven surfaces. If necessary reduce feed-rate.*
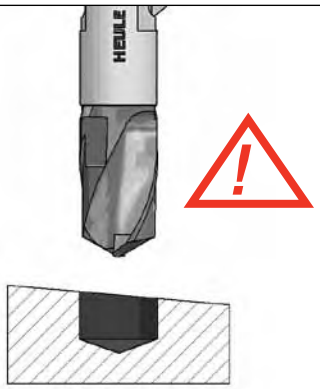	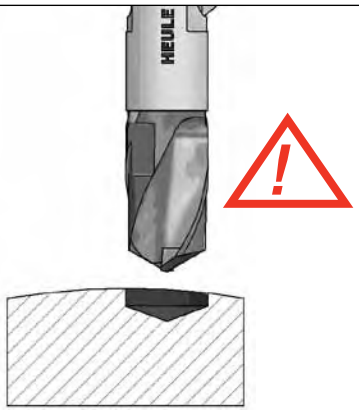	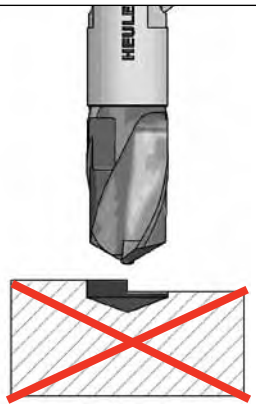
Drilling on angled surfaces.*	Drilling on off-center convex or concave surfaces.*	Drilling on uneven surface in forged or cast iron: Not possible.
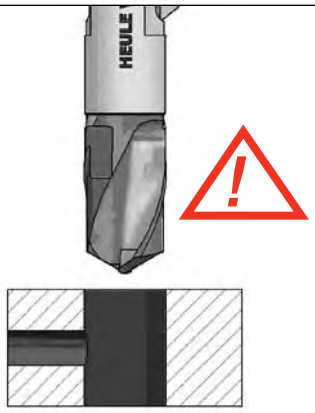	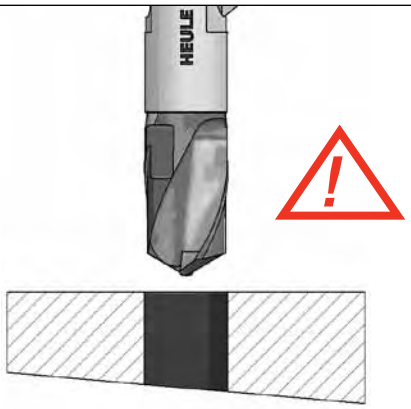	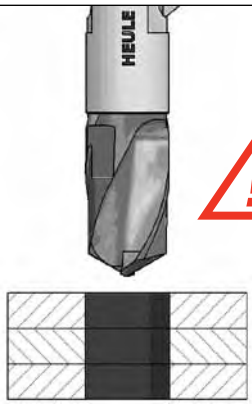
Drilling through a cross-hole. Ø cross-hole max. 0.5x Ø bore. If necessary reduce feed rate.**	Drilling with angle on back side. Reduce feed rate to about 50-60%*	Drilling through several layers. Seamless fitting of the different workpieces is necessary.

*Chamfer won't be clean.
**Tool can break! Chamfer blade can get stuck in the cross-hole (drive through the bore with no rotation of the tool!)

VEX-S

Application Data Sheet

Catalog No. HTC012

Company Name:_____ **Date:**_____

Contact Name:_____ **Phone:**_____

Address:_____ **Fax:**_____

City:_____ **State:**_____ **Zip:**_____ **Email:**_____

Application Data

Part No.:_____ **Description:**_____ **Workpiece Material:**_____

Hardness:_____ **Print** (Yes or No):_____ **Surface Quality of Workpiece:**_____

Required Hole Surface Finish:_____ **Hole Diameter Tolerance:**_____ **Position of Workpiece:**_____

Hole Description: ☐ Blind ☐ Through ☐ Pre-Drilled ☐ Interrupted ☐ Cast Hole **Actual Size:**_____ **Hole Depth:**_____

☐ Single Pass
☐ Multiple Pass
☐ Reamed Hole
☐ Threaded Hole

Sketch:

Chip Form:

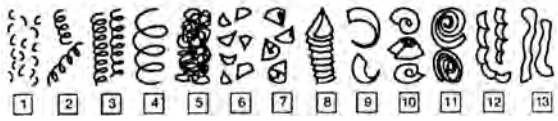

Machine Data

Drilling Info.:_____ **Tool Holder:**_____ **Spindle RPM Range:**_____

Drilling Angle:_____ **Coolant Available** (Yes or No):_____ ☐ Through Spindle ☐ External

Coolant Pressure:_____ **Coolant Flow:**_____ **Compressed Air:**_____

Type of Coolant: ☐ Soluble Oil ☐ Cutting Oil ☐ Synthetic **Type of Tool Holder:**_____ **Bushing** (Yes or No):_____

Distance to Workpiece:_____ **Current Type of Cutting Tool in Use:** ☐ HSS ☐ Inserted ☐ Carbide ☐ Other:_____

Flute Style: ☐ Fast ☐ Standard ☐ Slow ☐ Other:_____

Present Data

No. of Parts to be Machined (Month/Year):_____ **No. of Holes Per Part:**_____ **Surface Footage (SFM):**_____

Spindle Speed (RPM/SFM):_____ **Feed (IPR/mm/u):**_____ **Feed (IPR/MPM):**_____

Index Time:_____ **Cut Time:**_____ **Tool Change Time:**_____

No. of Holes Per Grind:_____ **No. of Grinds Available Per Tool:**_____ **No. of Tools to Produce Job:**_____

Objective

☐ Increase Holes Per Tool ☐ Shorten Process Time ☐ Improve Hold Finish ☐ Eliminate 2nd Operation
☐ Combine Drilling/Deburring ☐ Cut Multi-Diameter Holes in One Pass ☐ Other:_____

Explanation:

_____

_____

_____

Over 50 Years of Manufacturing Cutting Tools

HEULE manufactures cutting tools of the highest quality and precision consistent with Swiss craftsmanship for use in the machine tools of some of the world's largest manufactures; and the smallest machine shops.

Certified Management System ISO 9001 SQS

COFA

Universal deburring tool for even deburring on uneven surface

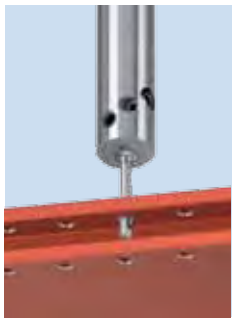

MICRO SNAP

Front & back chamfering of small through holes

SNAP

Simple and economical front & back deburring tool

VEX-S

Through hole drilling and chamfering system

COMBI

Combine the latest technology for producing holes with our deburring and chamfering system

DEFA

Adjustable front & back chamfering tool

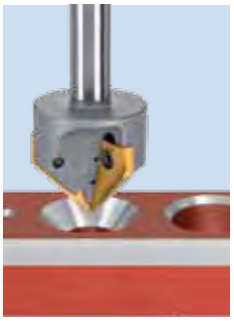

GH-K

Precision, chatter-free countersinks

SOLO

Reliable automatic front & back counterboring and spotface tool

GH-Z/E

Automatic front & back spotfacing systems

HEULE PRECISION TOOLS

HEULE TOOL CORPORATION
4722 A Interstate Drive
Cincinnati, Ohio 45246
USA

Phone (513) 860-9900
Fax (513) 860-9992
Toll Free 800-213-4341
info@heuletool.com
www.heuletool.com

HEULE WERKZEUG AG
Wegenstrasse 11/Postfach
9436 Balgach
Switzerland

Phone +41 71 726 38 38
Fax +41 71 726 38 39
info@heule.com
www.heule.com

ISO 9001:2008 Company